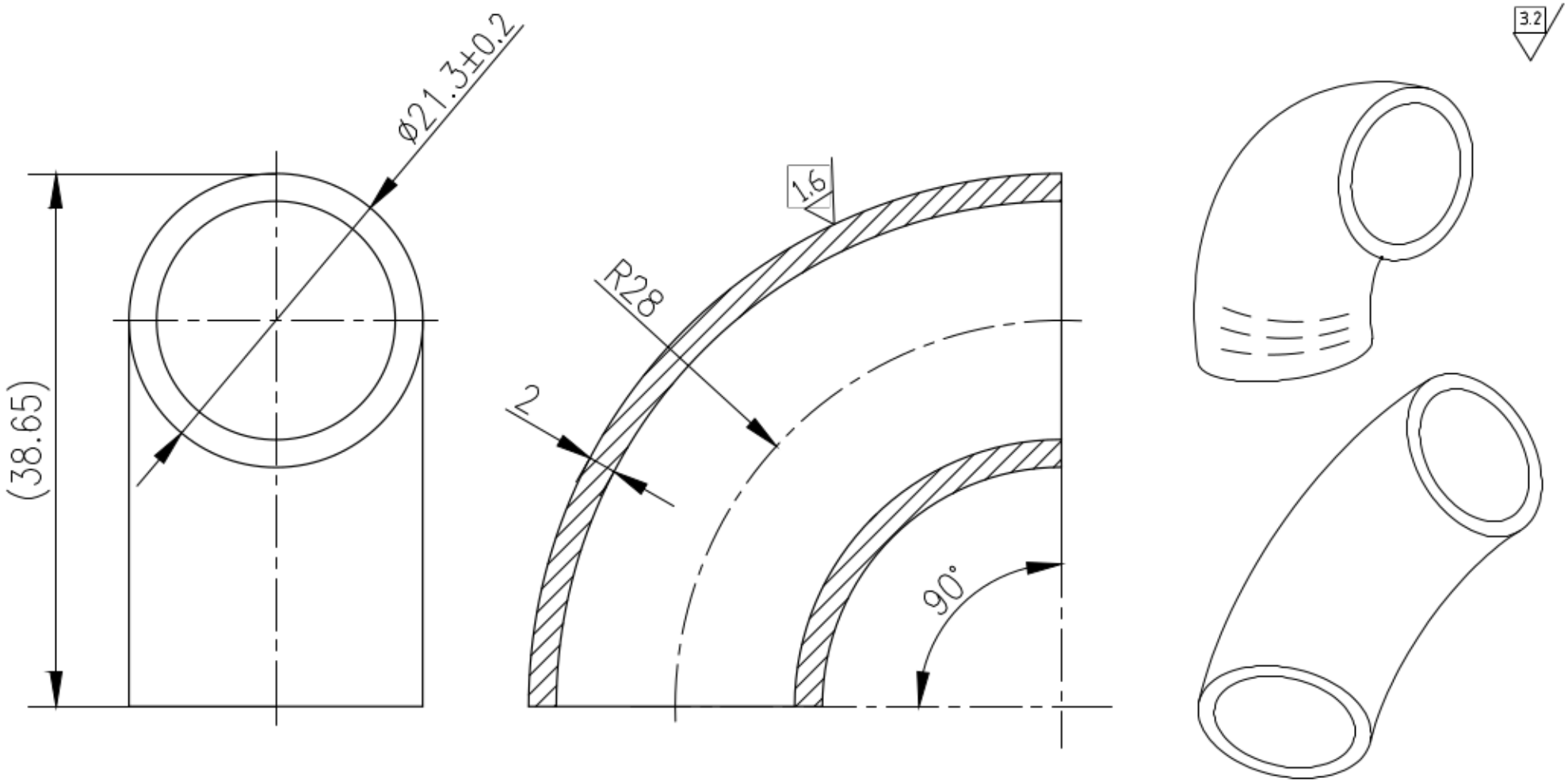

	0.5-6	>6-30	>30-120	>120-400	>400-1000	>1000-2000	10	>10-50	>50-120	>120-400
	±0.1	±0.2	±0.3	±0.5	±0.8	±1.2	±1°	±30′	±20′	±10′

AISI 304

S

1:1