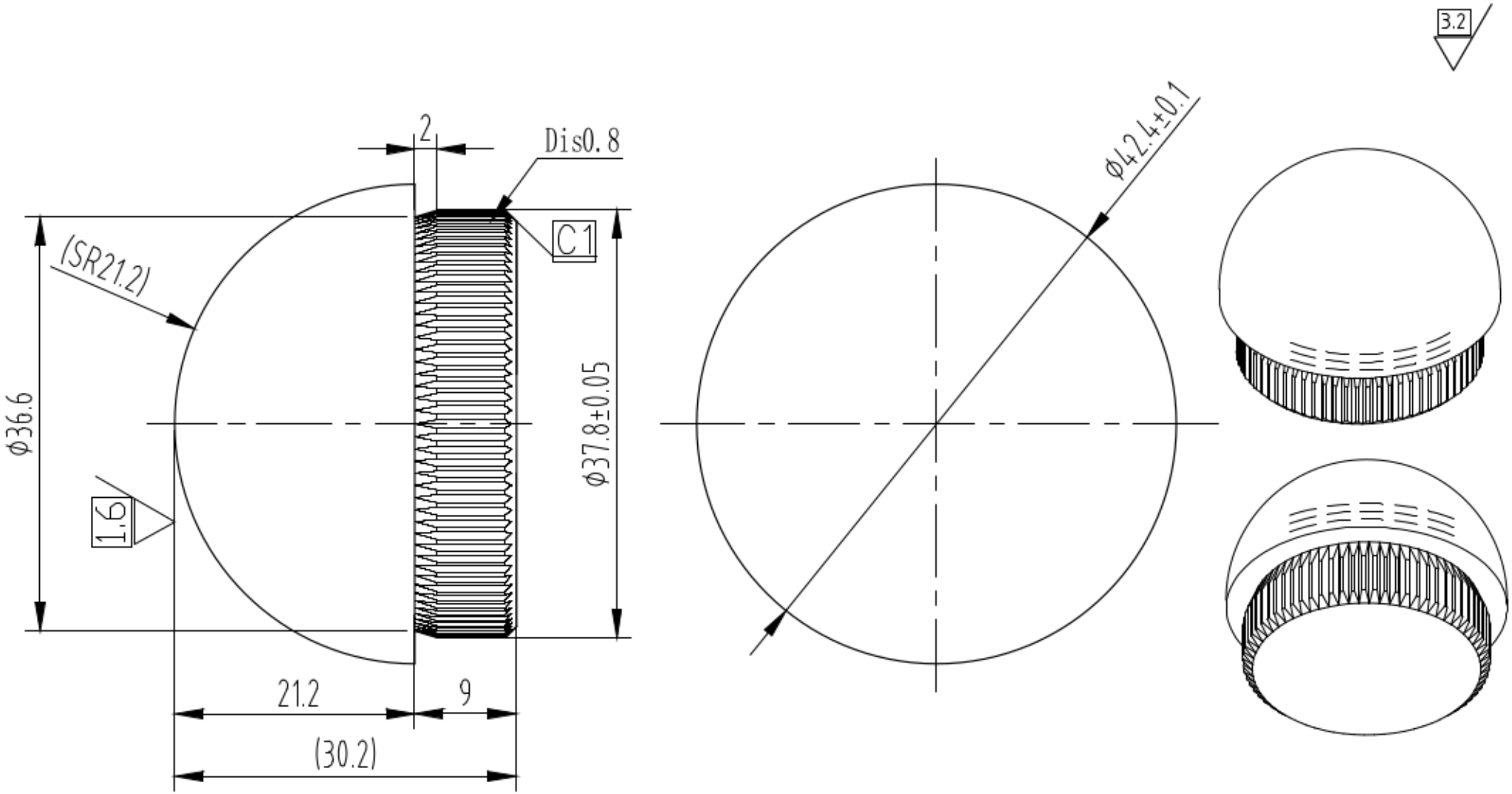

AISI 304	
S 1:1	103.42.02.S-2.5

103.42.02.S-2.5