650.60.12.02-11

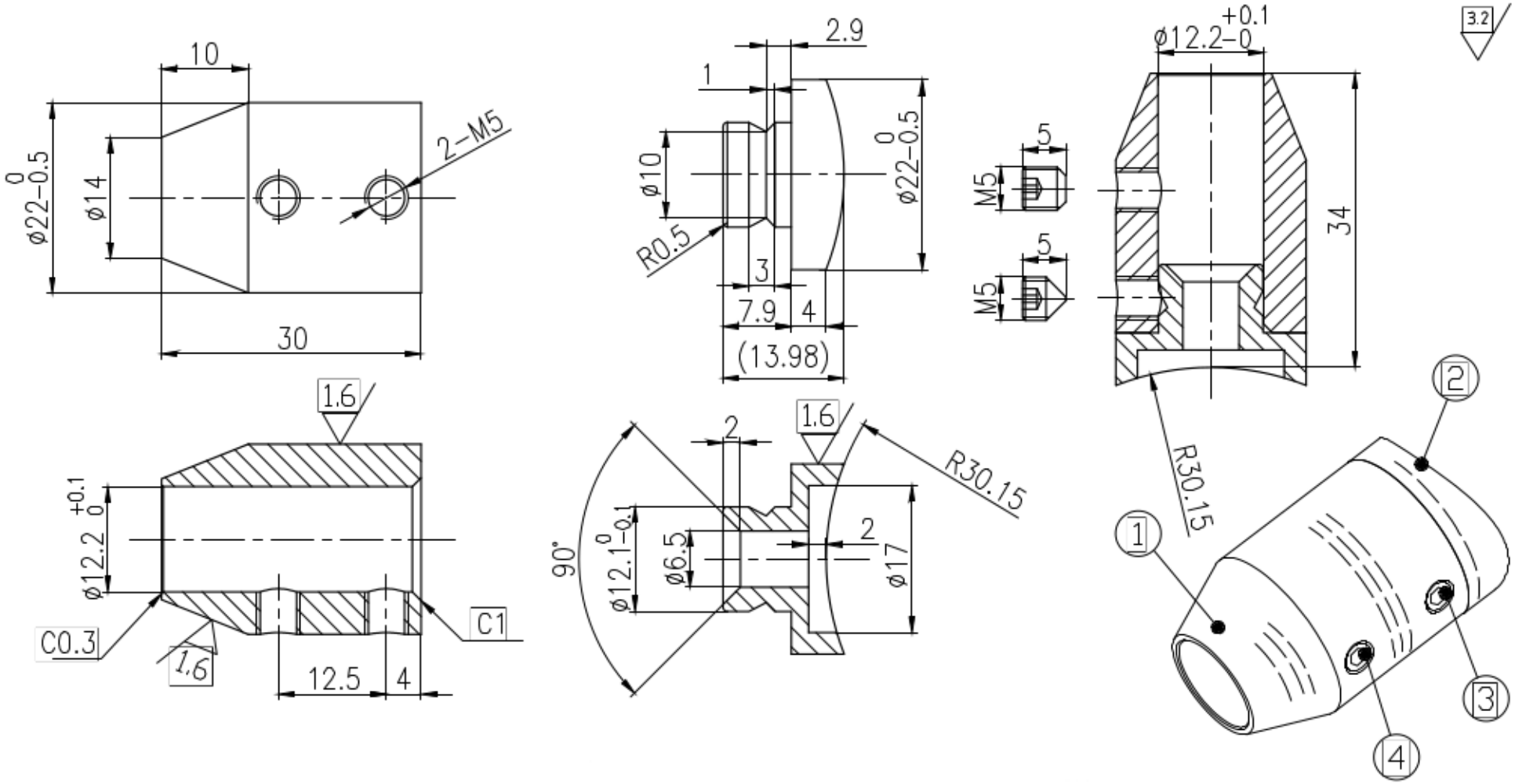


| | | | |
|---|---|---|---|
| 1 | 650.60.12.02-11-1 | | 1 |
| 2 | 650.60.12.02-11-2 | | 1 |
| 3 | DIN 913 - M5 x 5 | | 1 |
| 4 | DIN 914 - M5 x 5 | | 1 |
| 5 | DIN 7991 - M4 x 20 | | 1 |

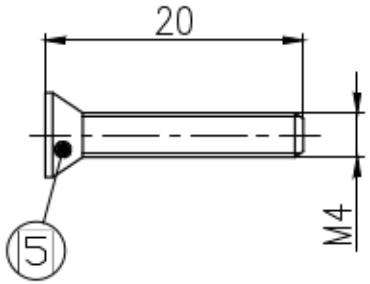


| | 0.5-6 | >6-30 | >30-120 | >120-400 | >400-1000 | >1000-2000 | 10 | >10-50 | >50-120 | >120-400 |
|---|---|---|---|---|---|---|---|---|---|---|
| | ±0.1 | ±0.2 | ±0.3 | ±0.5 | ±0.8 | ±1.2 | ±1° | ±30′ | ±20′ | ±10′ |

AISI 304

S 1:1

650.60.12.02-11