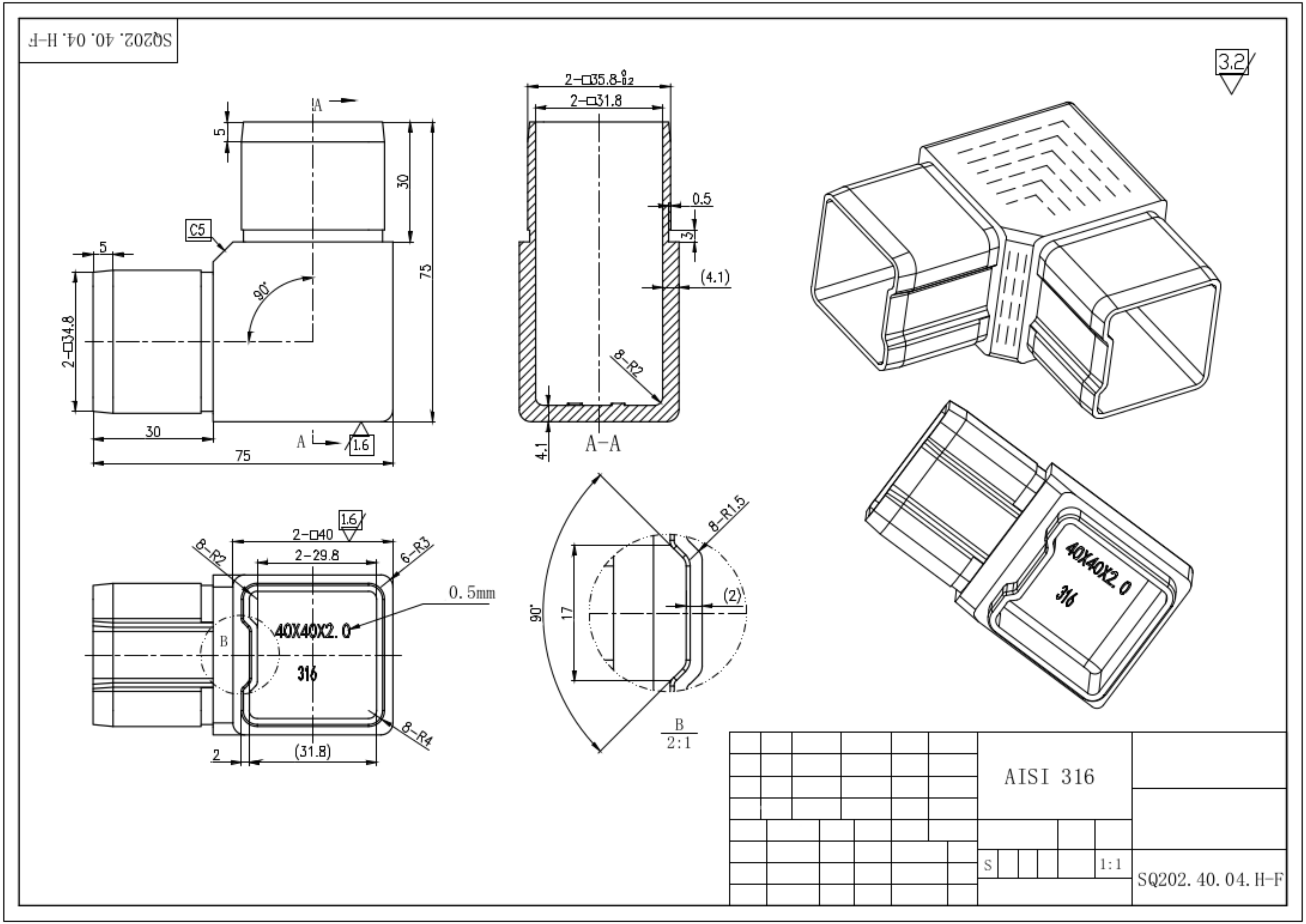

SQ202.40.04.H-F
3.2
A
5
30
75
C5
90°
2-□34.8
30
75
A
1.6
2-□35.8
2-□31.8
0.5
3
(4.1)
8-R2
4.1
A-A
2-□40
1.6
2-29.8
8-R2
6-R3
0.5mm
40X40X2.0
316
B
8-R4
2
(31.8)
8-R1.5
90°
17
(2)
B
2:1
40X40X2.0
316
AISI 316
S
1:1
SQ202.40.04.H-F