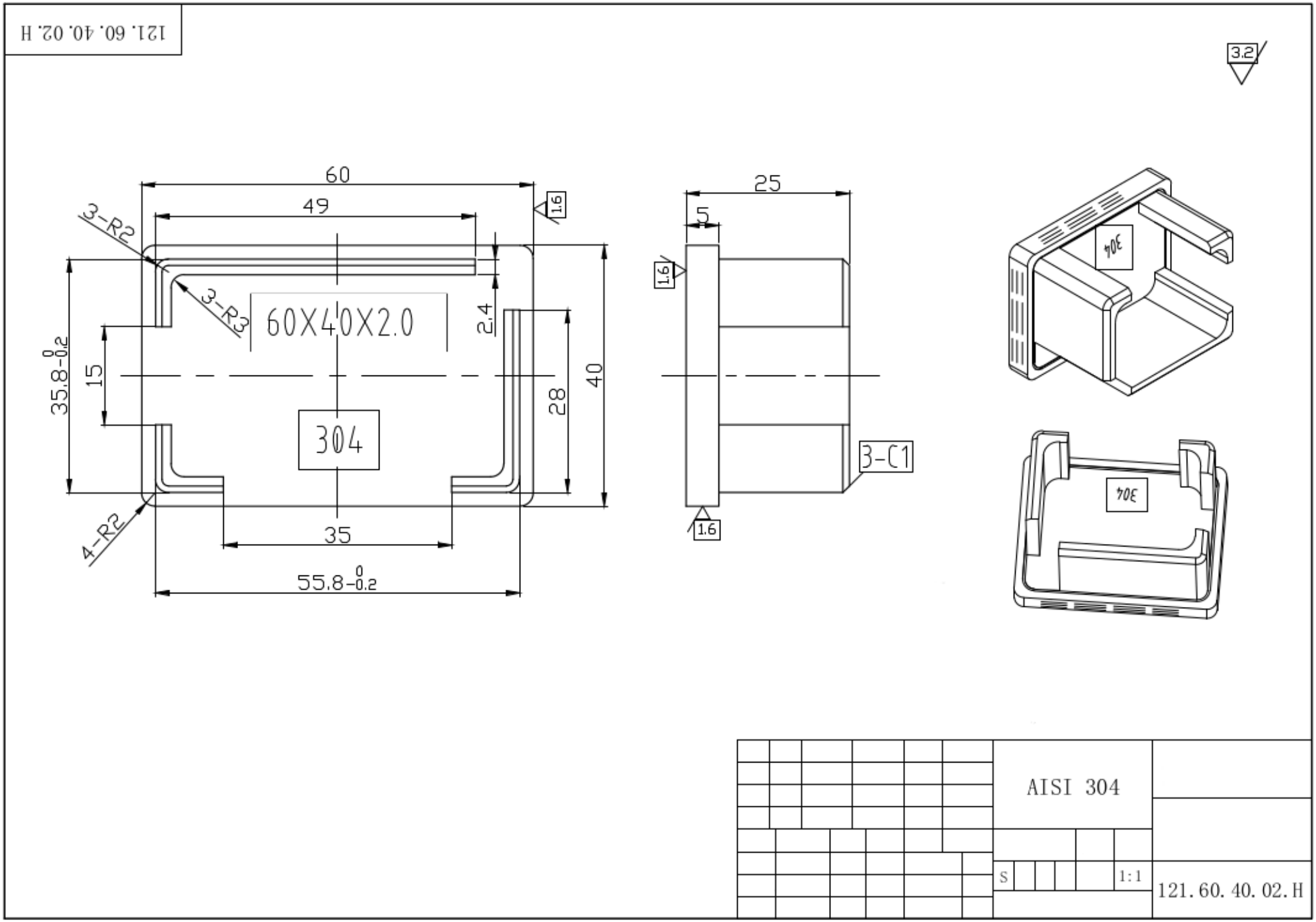
60
49
3-R2
3-R3
60X40X2.0
2.4
35.8-0.2
15
304
28
40
4-R2
35
55.8-0.2
1.6
25
5
3-C1
3.2
AISI 304
S
1:1
121.60.40.02.H