SQ803. 150. 40. 02

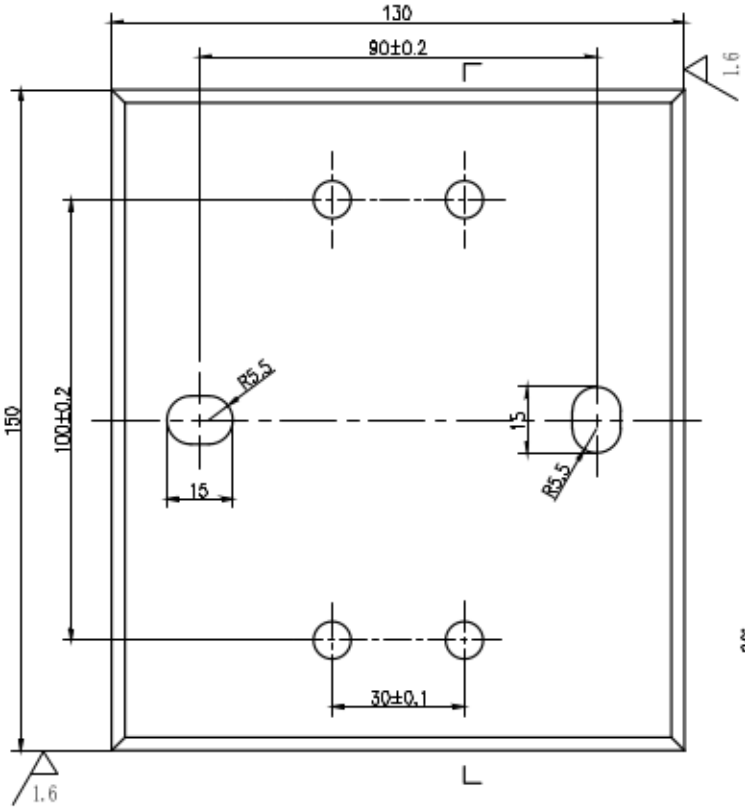

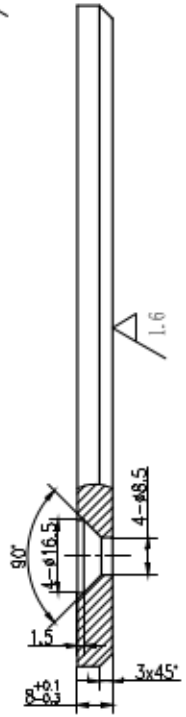

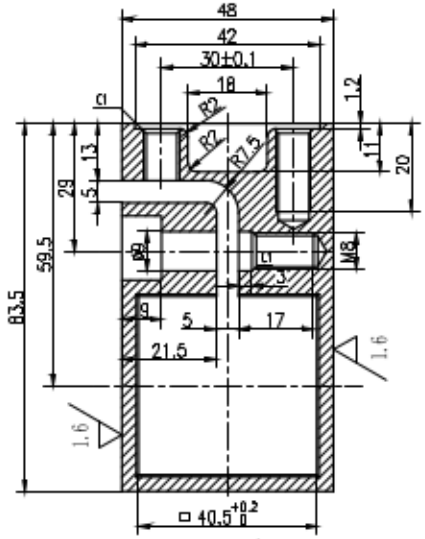

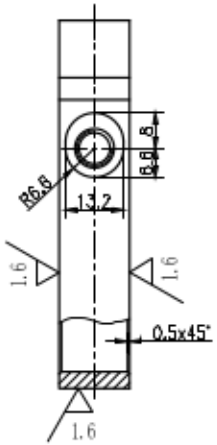

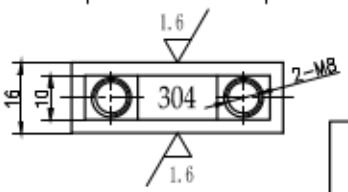

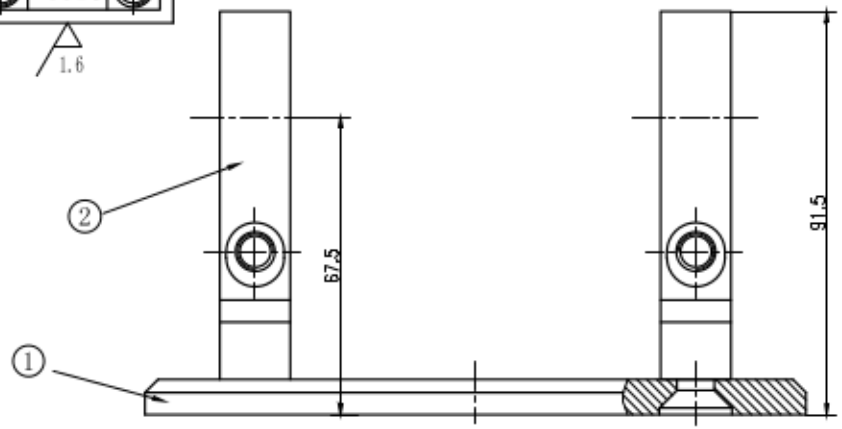

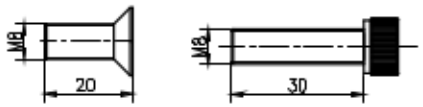

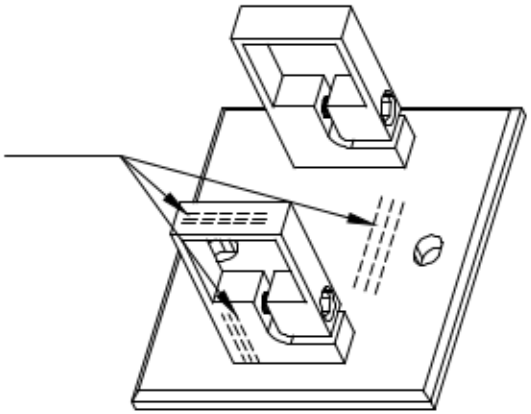

1	SQ803.150.40.02-1		1
2	SQ904.40.02		2

						AISI 304		
					17/02/17			
						S		1:1
								SQ803. 150. 40. 02