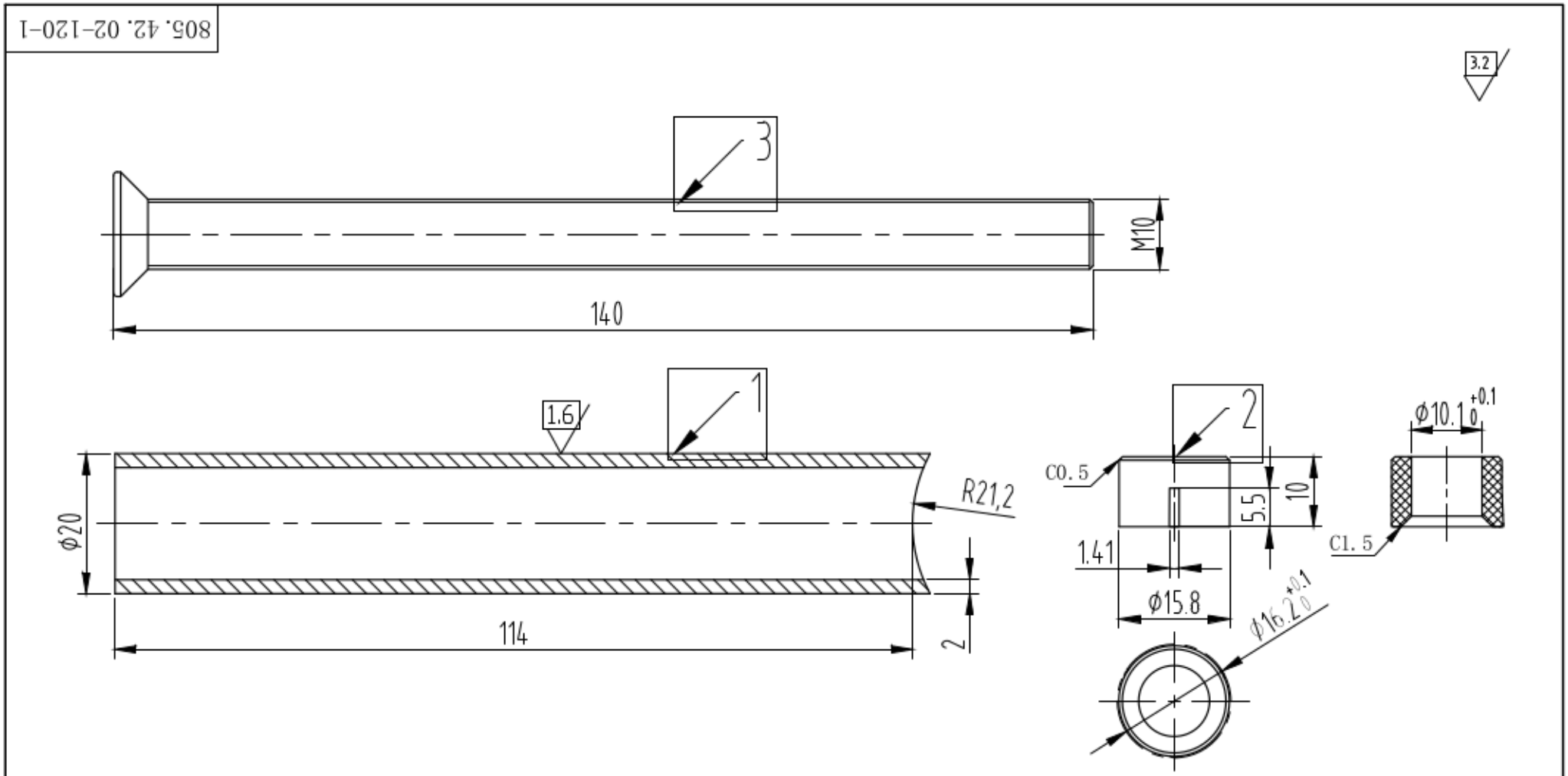

1	RF18-20-42-02-114		1
2	805-PF	POM	2
3	DIN7991 M10X140		1

						AISI 304	
						S	1:1

805.42.02-120-1

805.42.02-120-1