413.100.48.06.02-F

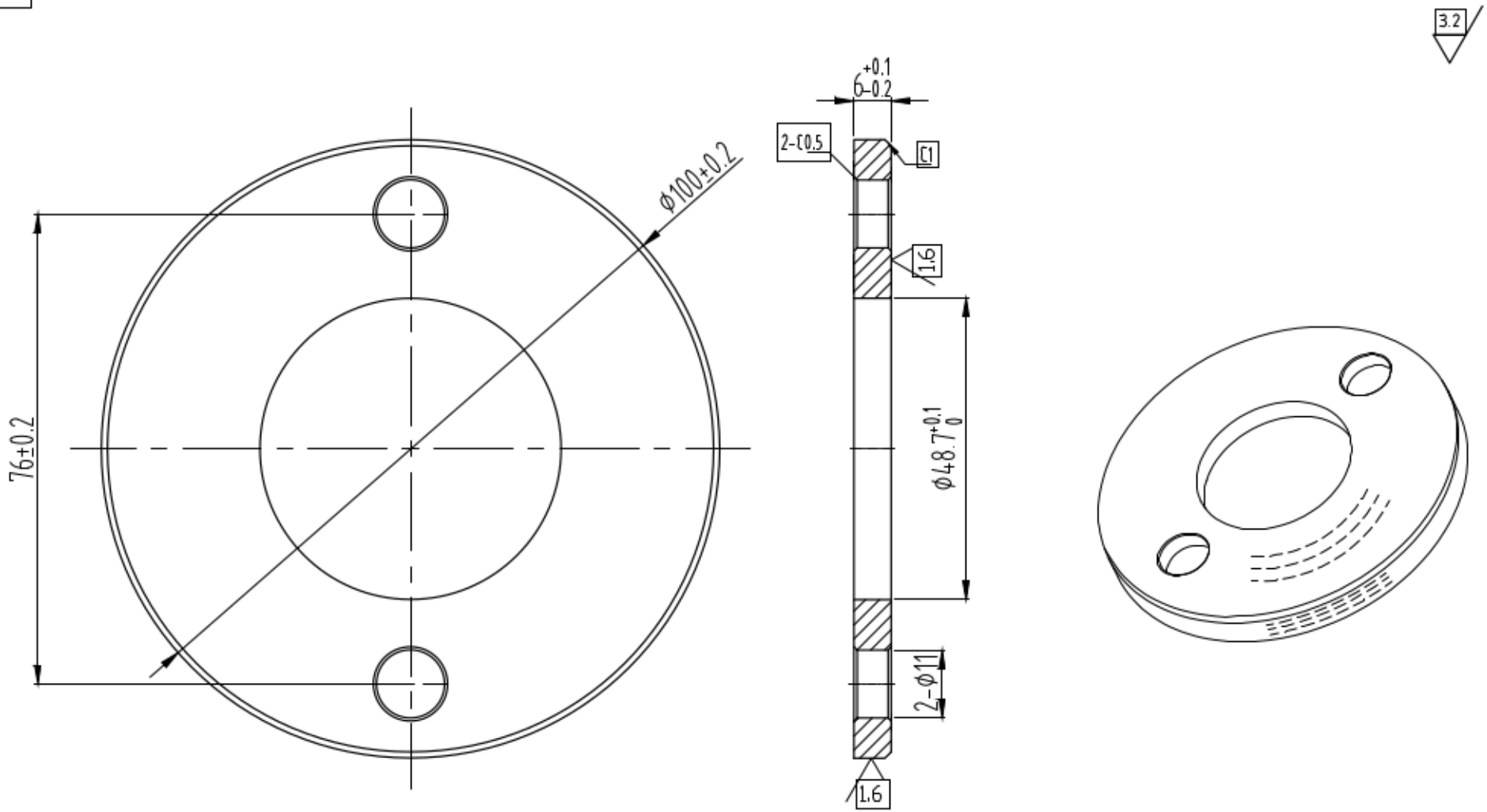


| | | | | | | | | |
|---|---|---|---|---|---|---|---|---|
| | | | | | | AISI 304 | | |
| | | | | | | | | |
| | | | | | | S | 1:1 | 413.100.48.06.02-F |